REVISIONS			
ZONE	REV.	DESCRIPTION	DATE
	A	INITIAL RELEASE	2/26/2016

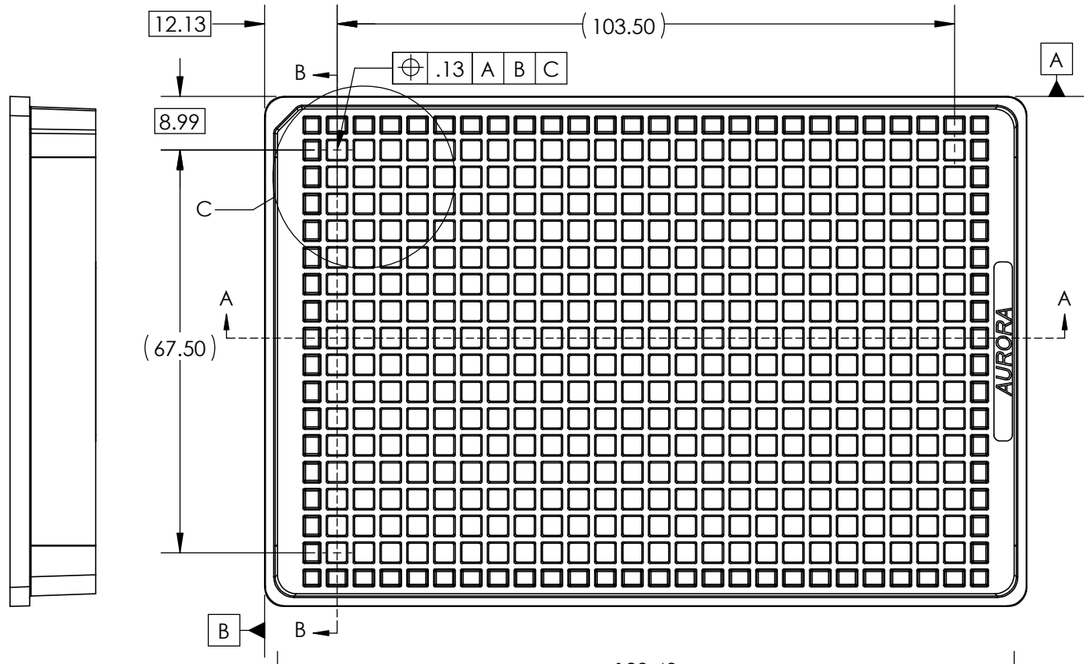

SECTION A-A

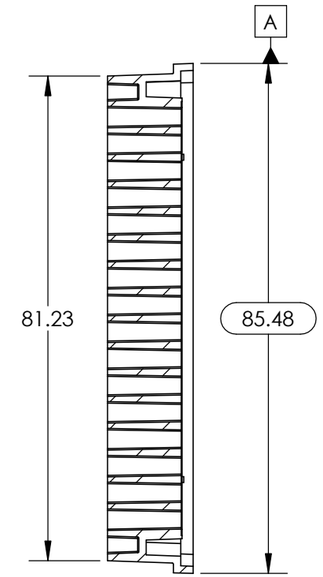

SECTION B-B

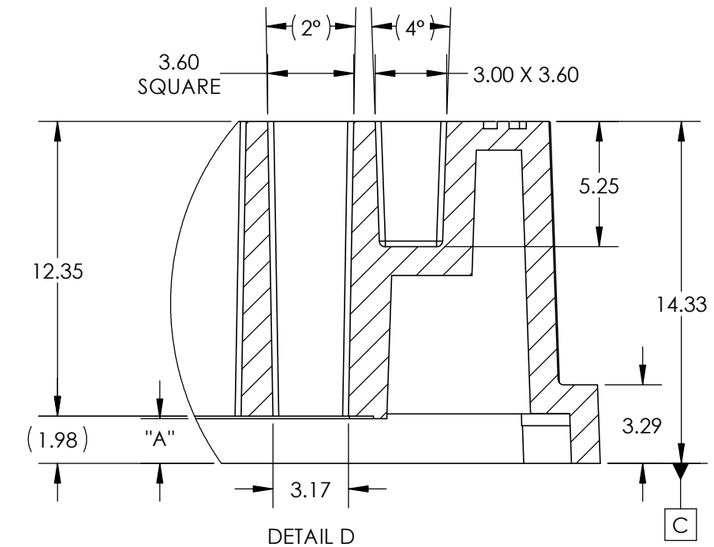

DETAIL D
SCALE 4 : 1

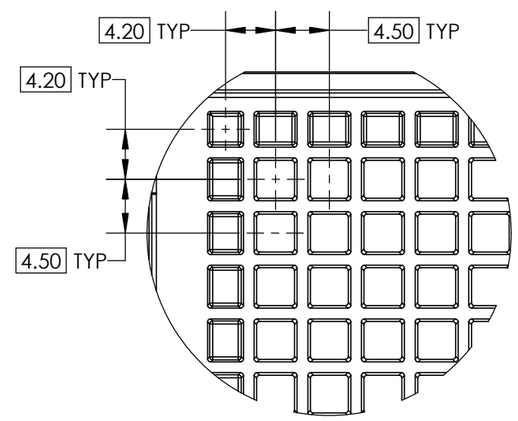

DETAIL C
SCALE 2 : 1

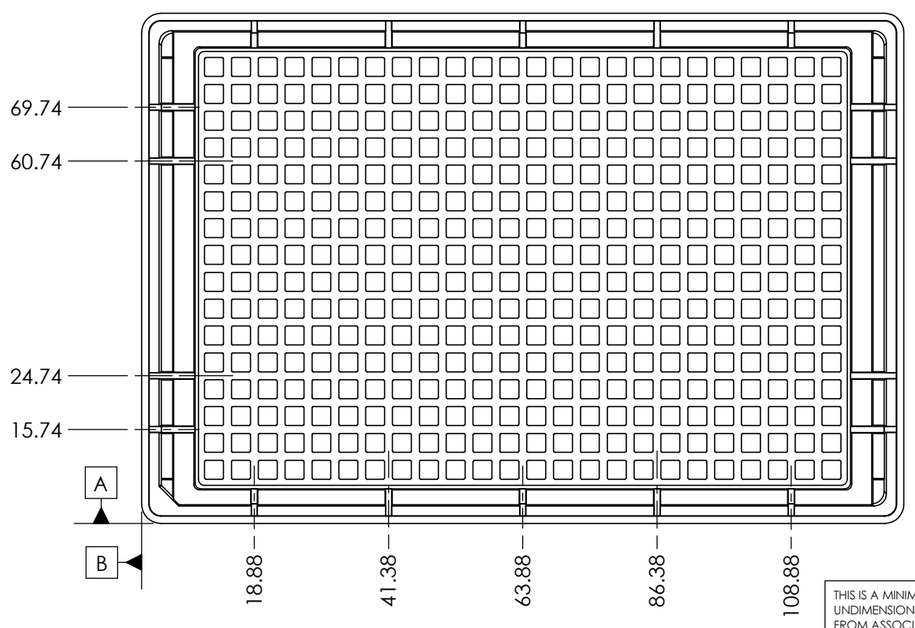

AURORA — FRAME C, 384 SQUARE WELL, LOW BASE, EVAP BARRIER

A X C X

	BOTTOM	"A" DIM	FILM P/N
0	SOLID	.99	N/A
1	100µm FILM	1.88	300005
2	188µm FILM	1.79	300004

	COLOR	MATERIAL
B	BLACK	ZEONOR 1420R WITH 15% FERCO FCC-20689-COP-3
W	WHITE	ZEONOR 1420R WITH 20% FERCO FCC-11729-COP-1
C	CLEAR	ZEONOR 1420R

NOTES:
1. PERFORM COSMETIC INSPECTION AT 12-18 INCHES AWAY WITH UNAIDED EYE.
2. MAX GATE VESTIGE: .13mm
3. MAX FLASH: .13mm

THIS IS A MINIMAL DIMENSION PART PRINT. UNDIMENSIONED FEATURES TO BE GENERATED FROM ASSOCIATED SOLIDWORKS MODEL.

PROPRIETARY AND CONFIDENTIAL
THE INFORMATION CONTAINED IN THIS DRAWING IS THE SOLE PROPERTY OF EDITION EIGHT. ANY REPRODUCTION IN PART OR AS A WHOLE WITHOUT THE WRITTEN PERMISSION OF EDITION EIGHT IS PROHIBITED.

UNLESS OTHERWISE SPECIFIED:
DIMENSIONS ARE IN MILLIMETERS
TOLERANCES:
ANGULAR: ±.5°
ONE PLACE DECIMAL ±.25
TWO PLACE DECIMAL ±.13
THREE PLACE DECIMAL ±.05
INTERPRET GEOMETRIC TOLERANCING PER: ANSI Y14.5-1994

	NAME	DATE
DRAWN	B. LENZ	2/26/2016
CHECKED		
MATERIAL	SEE MATERIAL CHART	
FINISH		

E8

TITLE: AURORA 384 SQUARE WELL, LOW BASE, EVAP BARRIER

SIZE	DWG. NO.	REV
B	AXCX	A

SCALE: 1:1 | WEIGHT: | SHEET 1 OF 1